Mine Safety and Health Administration
Directorate of Technical Support
Approval and Certification Center
Mechanical Safety Division

# Summary of Investigation

# Eimco 915E Visibility Problem at Cottonwood Mine, Orangeville, Utah

Technical Assistance No. TA-90-40

August 13, 1990

by

Dennis L. Ferlich
Mechanical Engineer
Mechanical Safety Division

# EIMCO 915E VISIBILITY PROBLEM
# AT COTTONWOOD MINE, ORANGEVILLE, UTAH

By Dennis L. Ferlich[1]

---

## ABSTRACT

Two Eimco 915E Scoops are operated as general haulage machines in the Cottonwood Coal Mine in Orangeville, Utah. This use requires them to travel in high traffic areas of the mine where mine personnel and other equipment are frequently present. These scoops were involved in several accidents, reportedly as a result of impaired operator visibility. The United Mine Workers of American (UMWA), Local 2176, expressed concerns about potential safety hazards caused by the lack of operator visibility and filed a request for an inspection under Section 103(g) of the Federal Mine Safety and Health Act of 1977. At the request of UMWA Local 2176, the Approval and Certification Center conducted a technical investigation to determine the causes and extent of the reported visibility problems. Recommendations have been included to minimize safety hazards related to impaired operator visibility.

## INTRODUCTION AND PURPOSE

Pursuant to a written request to Robert W. Dalzell, Chief, Approval and Certification Center, from the United Mine Workers of America (UMWA) Local 2176, District 22, the Mechanical Safety Division conducted a technical investigation into reported operator visibility problems on two Eimco 915E Scoops located at the Cottonwood Mine, I.D. No. 42-01944, in Orangeville, Utah. A phone conversation between Mr. Roger Schmidt and Mr. George Dvorznak on June 25, 1990, initiated this technical assistance investigation. The UMWA'S request was prompted by a complaint from an Eimco 915E Scoop operator that he could not see the travelway or oncoming traffic for a distance of approximately 300 feet beyond the machine, and by the fact that these machines had been involved in several accidents.

The purpose of this investigation was to determine the nature and extent of the reported visibility problem and to determine the feasibility of modifying the machines to eliminate the problem.

## BACKGROUND

On May 21, 1990, the United Mine Workers of America (UMWA) Local 2176, District 22, requested that the MSHA Orangeville Field Office, District 9, investigate a complaint filed under Section 103(g) of the Federal Mine Safety and Health Act of 1977, at the Cottonwood Coal Mine, I.D. No. 42-01944, Orangeville, Utah, to determine if an imminent danger existed because of the lack of operator visibility on two Eimco 915E Scoops. MSHA inspector, Fred Marietti conducted the 103(g) investigation on May 22, 1990, and documented the results in report No. 5630804. There were no violations, safeguards, or orders issued as a result of the 103(g) investigation, but Mr. Marietti concluded that a visibility problem did exist and recommended that traffic rules be established and followed to avoid future accidents.

The UMWA Safety Committee, Local 2176, disagreed with Mr. Marietti's decision and still contended that an imminent danger did exist. During the period of June 8-13, 1990, the UMWA Safety Committee sent letters to Robert W. Dalzell, Approval and Certification; William Tattersall, Assistant Secretary; William Holgate, District Manager; Jensen Bishop, Subdistrict Manager; Safety and Health Technology Center, Denver, Colorado; and Eimco Mining Machinery, requesting further assistance in addressing the visibility problem on the Eimco 915E Scoops.

## DISCUSSION

On June 12, 1990, Mr. Jerry Lemon, MSHA Inspector, District 9, and Mr. Dennis Ferlich, Mechanical Engineer, Mechanical Safety Division, Approval and Certification Center, conducted a technical investigation of the reported visibility problem at the Cottonwood Mine, Orangeville, Utah. The investigation consisted of both an above ground survey with adequate natural light for visibility, and an in-mine survey where visibility was solely dependent upon artificial lighting. The following procedures were used for both the above ground survey and the in-mine survey:

---

[1]Mechanical Engineer, Approval and Certification Center, Mine Safety and Health Administration, Triadelphia, WV.

1. The Eimco 915E Scoop, S/N 915-1147, was parked on a fairly even surface (i.e. minimal dips and rolls) and remained stationary.

2. A movable object, a man for the above ground survey and an Isuzu pickup truck for the in-mine survey, was placed at various locations around the machine.

3. An Eimco 915E Scoop operator for Cottonwood Mine, Mr. Terral Hardy, seated in the operator's compartment, noted when the objects or specific parts of the objects could and could not be seen.

4. The vertical heights of the objects or specific parts of the objects, and the distance from the operator to the objects were measured and recorded. In addition, the areas of the machine where operator visibility was obstructed were recorded.

## Machine Dimensional Evaluation

Dimensional measurements of the Eimco 915E Scoops, S/N's 915-1147 and 915-1146, were taken. The overall machine measurements are shown in Figure Nos. 1 and 2.

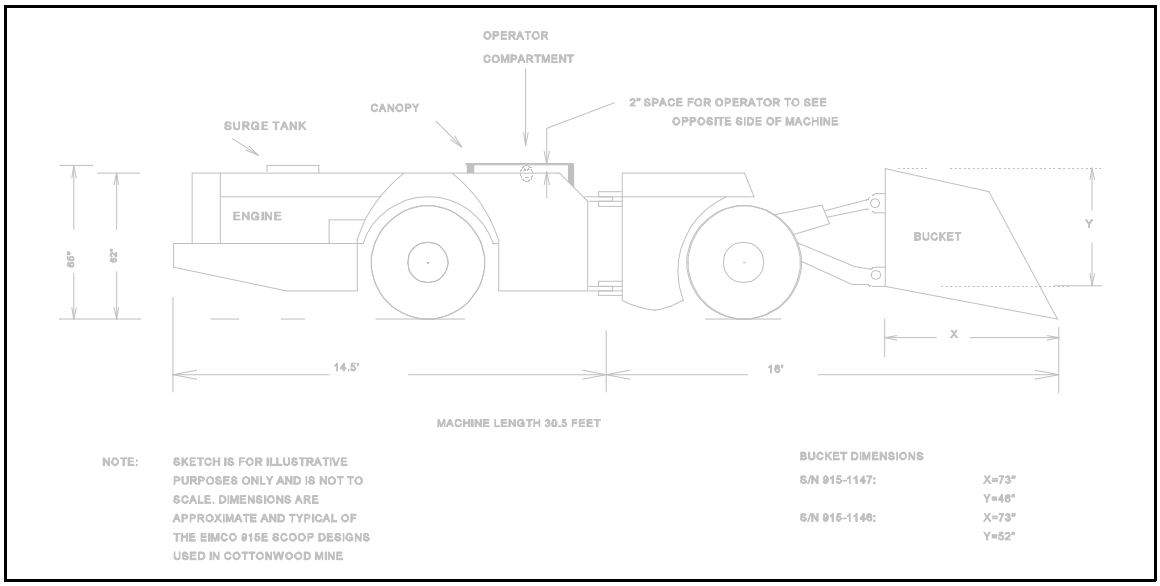


Figure 1 - EIMCO 915E SCOOP SIDE VIEW

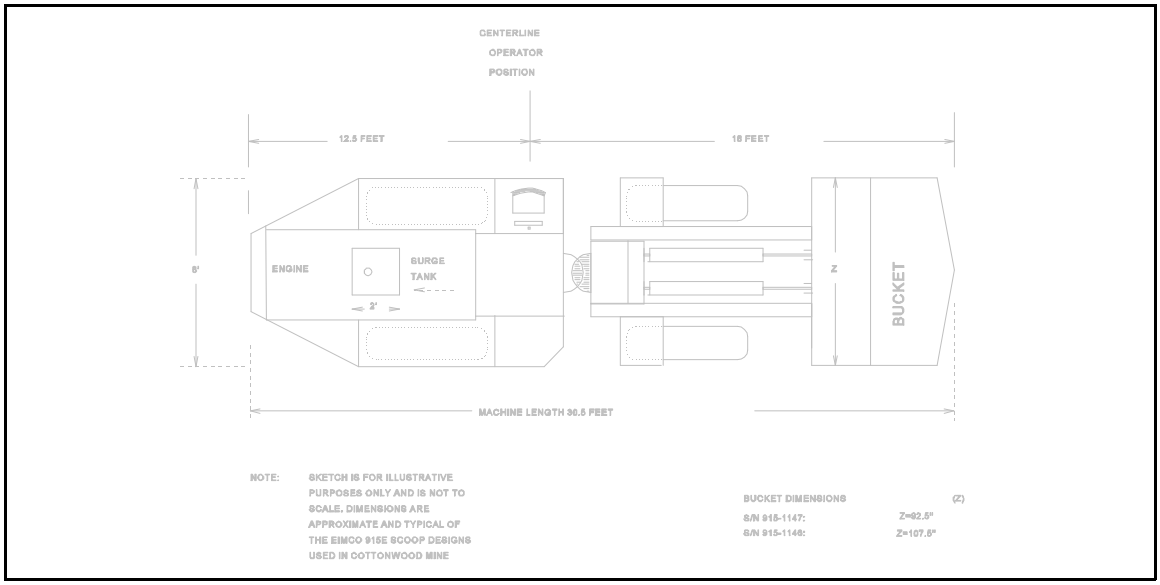


Figure 2 - EIMCO 915E SCOOP TOP VIEW

When viewing to the opposite side of the machine, the operator's observation area between the machine frame and canopy is approximately 2 inches high by 21 inches long in the middle to right section and 5 3/8 inches high by 7 inches long in the left section, as shown in view A of Figure No. 3. When viewing toward the engine end of the machine, the operator's right hand side, the observation area is approximately 7 1/2 to 7 5/8 inches high by 24 inches long for scoop S/N 915-1147 and 5 1/2 to 6 inches high by 24 inches long for scoop S/N 915-1146, as shown in view B of Figure No. 3.

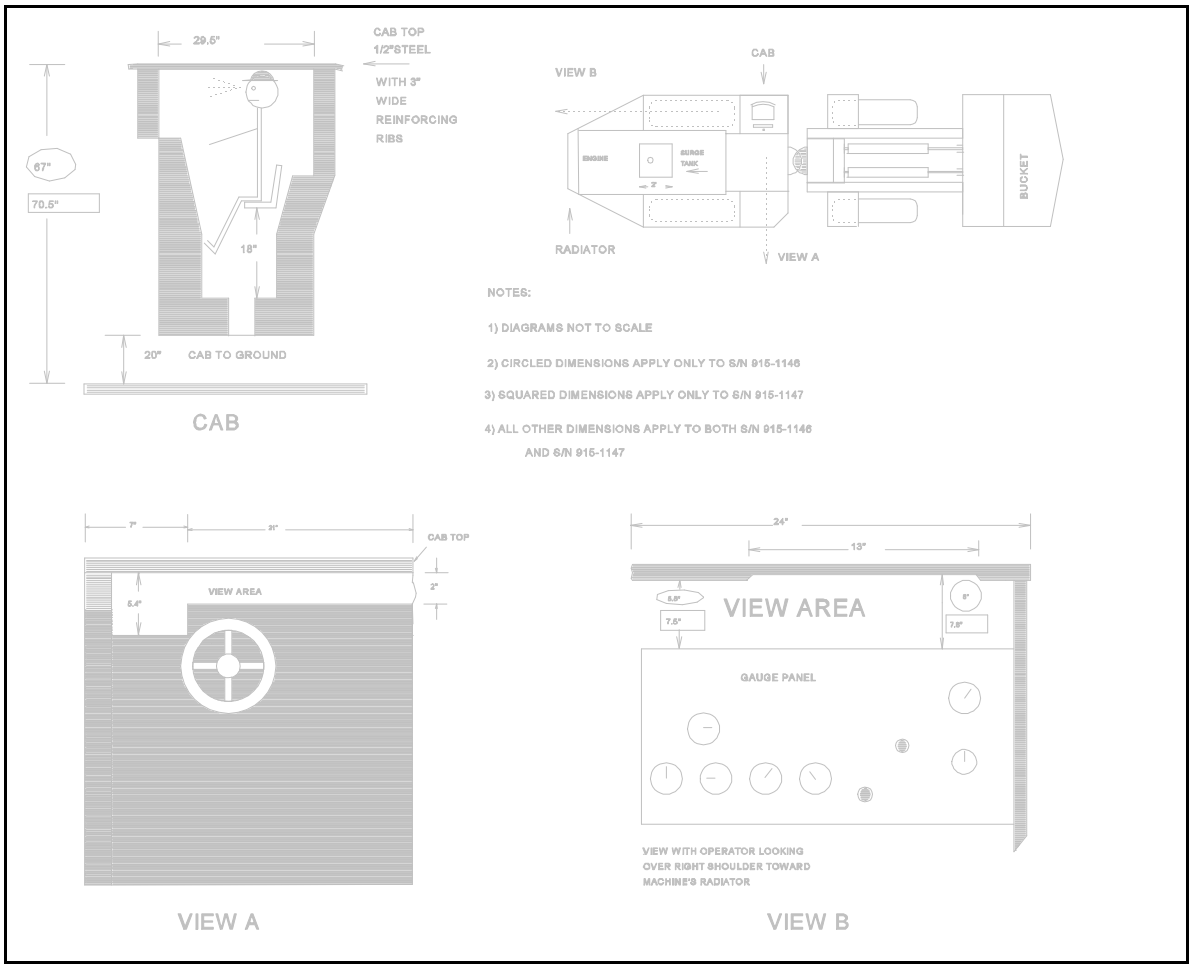


Figure 3 - EIMCO 915E SCOOP - OPERATOR'S COMPARTMENT AND CANOPY DIMENSIONS

The measurements taken during this part of the investigation helped define the machine-related factors that adversely affected the operator's visibility. The measurements clearly showed that modifications to components on the machines would not completely eliminate the operator visibility problems. Modifications to cover plates, lights, and the bucket would make minor improvements to visibility at certain angles of sight where these objects actually obstructed the operator's vision. However, the operator's line of vision is mainly restricted by the machine frame itself. To eliminate the lack of visibility caused by the machine frame, the operator's compartment would need to be raised so that the operator's line of vision is much higher than the machine frame. This modification would only be feasible if mine roof heights do not limit the operator's compartment height. In the case of the Cottonwood Mine, the heights of the operator's compartments and canopies were established based on the mine roof heights; therefore, raising these components to improve visibility is not feasible.

## Above Ground Survey

To further clarify the extent of the visibility problem, the above ground survey using the previously described procedures was conducted. In this survey, a 5'9" tall man wearing a hardhat was the movable object. During this part of the investigation, the man walked around the entire machine maintaining a distance of approximately four (4) feet from any part of the machine. The four foot distance was chosen to simulate the distance typically found between the machine and mine rib in the twenty-foot wide entries and crosscuts found in the Cottonwood Mine. The operator noted the areas where he could not see the man's hardhat.

Once the areas of impaired visibility, commonly called blind spots, were located at the four-foot distance, the man walked away from the bucket end of the machine, but parallel to the side at the four-foot distance and the operator noted when the man's hardhat could be seen. This established the distance between the operator and the man where no part of a 5'9" tall man could be seen. This distance was recorded; then the man continued to walk away from the machine in the same direction until the operator noted when the man's belt buckle could be seen. This distance was recorded; then the man continued to walk away from the machine in the same direction until the man's feet could be seen by the operator. This distance was recorded. The same procedure was followed with the operator viewing over the engine end of the machine to establish the blind spot distances in this direction.
The results of this part of the investigation are shown in Figure Nos. 4 and 5. As noted, this survey was conducted only on Eimco 915E Scoop S/N 915-1147, since both scoops are similar in design. The cross-hatched areas of Figure Nos. 4 and 5 represent the total blind spot areas around the machine, within the four-foot distance, where the operator could not see any portion of the 5'9" tall man.

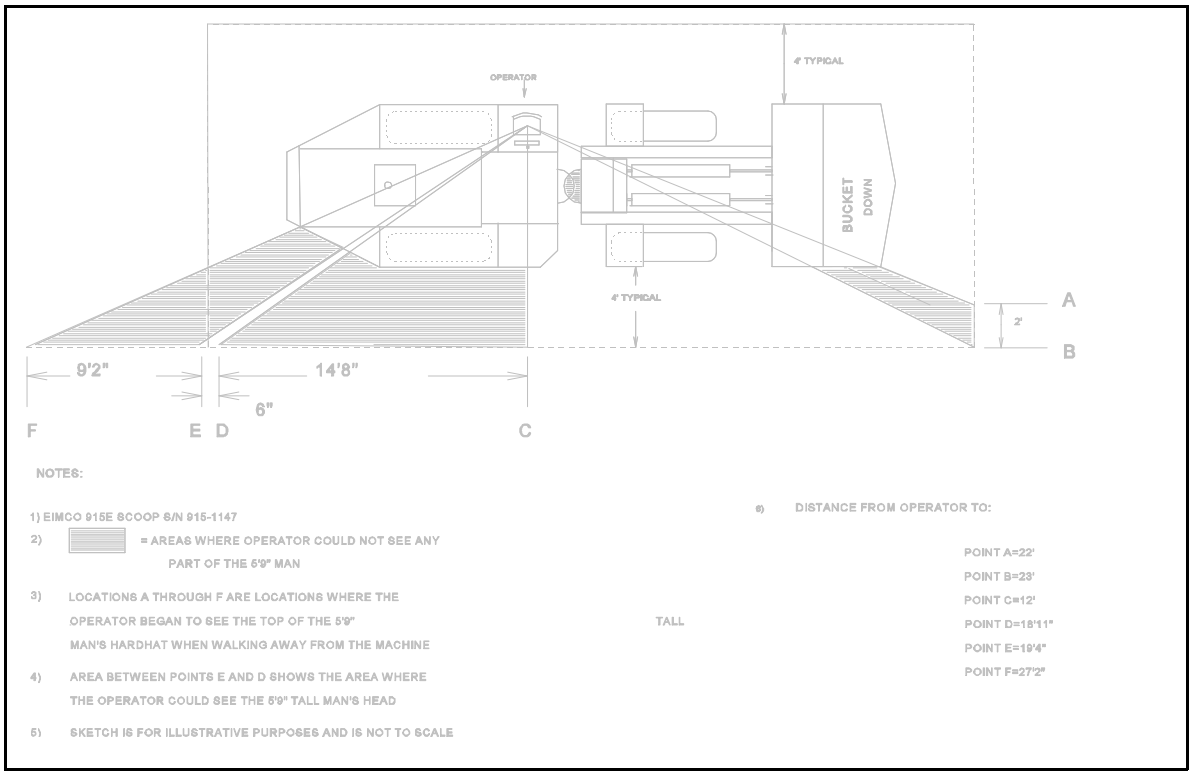


**Figure 4** – ABOVE GROUND BLIND SPOT AREA DETERMINATION

Locations A through F on Figure No. 4 represent the distances from the operator to the 5'9" tall man where the operator began to see the 5'9" tall man's hardhat as the man walked away from the machine, parallel to the side at the four-foot distance. The six inch long area shown between locations D and E is the only area of visibility within the 24 feet 2 inch total blind spot area defined between locations C and F, and only the head of the 5'9" tall man could be seen in this area.

After the total blind spot areas were determined and borders of the total blind spot areas were defined, the distances from the operator to the 5'9" tall man where his hardhat, belt, and feet could be seen by the operator were determined. These results are illustrated on Figure No. 5.

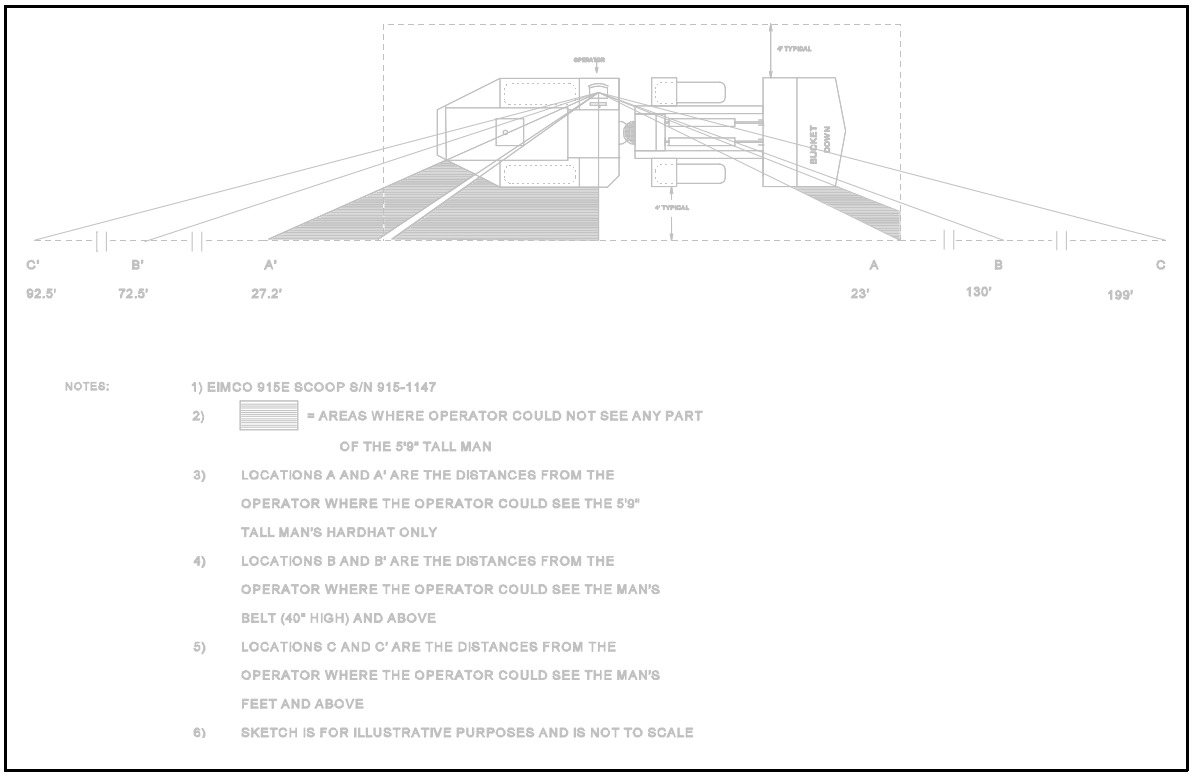


**Figure 5** – ABOVE GROUND VISIBILITY DETERMINATION

In summary, when viewing toward the bucket end of the machine, as the man walked away from the operator, the operator was able to see the man's hardhat at a distance of 23 feet, the man's upper body from his belt (about 40 inches above the ground) to his head at a distance of 130 feet, and all of the man's body from his feet to his head at a distance of 199 feet. When viewing toward the engine end of the machine, following the same procedures, the operator was able to see the man's hardhat at a distance of 27 feet 2 inches, the man's upper body from his belt to his head at a distance of 72 feet 6 inches, and all of the man's body from his feet to his head at a distance 92 feet 6 inches.

The three heights on the man (i.e. hardhat, belt, and feet) were chosen to establish a range of heights of objects or personnel commonly found in the mine. For example personnel walk upright, stoop, and perform inspections in various positions. Furthermore, objects such as equipment, transformers, etc. are commonly located in travelways of the mine and are of varying profile. All of these situations result in different heights of personnel and objects that must be seen by the Eimco 915E Scoop operators. Therefore, this survey provided data to define the operator's visibility ranges from ground level up to the height of an average size man.

As shown in Figure No. 5, the operator's visibility of objects less than 40 inches high is worse when viewing over the bucket end of the machine, versus over the engine end of the machine, but the total blind spot area for an object 5'9" tall or less located close to the machine is worse when viewing over the engine end of the machine.

## In-Mine Survey

The above ground survey showed that a visibility problem does exist. In order to further define the extent of the visibility problem as related to actual mining practices, an in-mine survey was conducted using the previously described procedures. In this survey, an Isuzu pickup truck was the movable object. The Isuzu pickup truck was chosen for the in-mine survey because several accidents possibly related to the visibility problem have involved collisions between the Eimco 915E Scoops and Isuzu pickup trucks.

During the first phase of the in-mine survey, both the Eimco 915E Scoop and the Isuzu pickup truck were parked in the center of the entry with the bucket end of the scoop facing the front of the pickup truck. The section of the entry used for this survey was fairly level with insignificant dips or rolls in the travelway.

Initially the Isuzu pickup truck was located nearly against the bucket of the Eimco 915E Scoop. At this point, the operator noted if he could see any part of the Isuzu pickup truck. The Isuzu pickup truck was then backed away from the scoop until the operator could see a portion of the Isuzu cab. The distance between the operator and the front of the Isuzu pickup truck was measured and recorded. The Isuzu pickup truck was backed away from this point until the operator could see the headlights of the truck. This distance was measured and recorded. These procedures were followed with the bucket of the Eimco 915E Scoop rotated in the three different configurations normally used by the operators; that is, down position for mucking-type operations, half roll position for transporting materials such as timbers, and full roll position for transporting materials such as gravel. The results of this part of the investigation are shown in Figure Nos. 6-8.

The location where the operator could see the direct beam of the headlights of the Isuzu pickup truck was established as a data point for the in-mine survey. The direct beams of the lights are the means reportedly utilized by mine personnel to identify the type of object based on their lighting arrangement and the location of the object. Reflections of light from the roof or ribs do not provide sufficient information to the scoop operator to allow him to identify the object or determine the distance to the object. For this survey, the area of inadequate visibility was considered to exist from the machine to the point where the operator could see the direct beam of the Isuzu pickup truck headlights which were located at a height of 31 inches above the ground. As shown in Figure Nos. 6-8, the areas where the pickup truck lights could not be seen ranged from 83 feet 6 inches to 164 feet from the operator, depending on the roll position of the bucket. The half roll position was the worst case for adequate visibility as shown by the distance of 164 feet.

| DISTANCE 'X' | COMMENTS |
|---|---|
| 20'2" | OPERATOR SEES ONLY TOP RIGHT PORTION OF ISUZU CAB |
| 93'0" | OPERATOR SEES BOTH ISUZU HEADLIGHTS |

NOTES:
1) ISUZU PICKUP TRUCK WAS USED AS OBJECT
HEADLIGHT HEIGHT=31" ROOF HEIGHT(CAB)=64"
2) BOTH EIMCO 915E SCOOP AND ISUZU WERE CENTERED IN ENTRY
3) BUCKET IN DOWN POSITION FACING ISUZU
4) DISTANCE 'X' = DISTANCE BETWEEN OPERATOR AND FRONT OF ISUZU

Figure 6 - IN MINE BLIND SPOT SURVEY - BUCKET DOWN POSITION

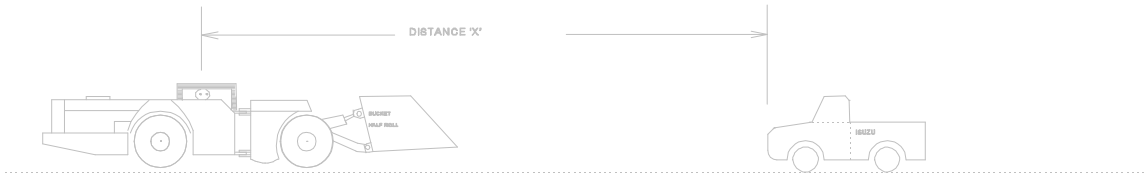


| DISTANCE 'X' | COMMENTS |
|---|---|
| 19'0" | OPERATOR CAN'T SEE ANY PART<br>ISUZU |
| 164'-0" | OPERATOR CAN SEE ONLY ONE HEADLIGHT |

NOTES:

1) ISUZU PICKUP TRUCK WAS USED AS OBJECT
HEADLIGHT HEIGHT=31" ROOF HEIGHT(CAB)=64"

2) BOTH EIMCO 915E SCOOP AND ISUZU WERE
CENTERED IN ENTRY

3) BUCKET IN HALF ROLL POSITION FACING ISUZU

4) DISTANCE 'X' = DISTANCE BETWEEN OPERATOR
AND FRONT OF ISUZU

Figure 7 - IN MINE BLIND SPOT SURVEY - BUCKET HALF ROLL POSITION

| DISTANCE 'X' | COMMENTS |
|---|---|
| 19'0" | OPERATOR SEES TOP PORTION OF ISUZU CAB |
| 83'-6" | OPERATOR SEES BOTH ISUZU HEADLIGHTS |

NOTES:
1) ISUZU PICKUP TRUCK WAS USED AS OBJECT
HEADLIGHT HEIGHT=31" ROOF HEIGHT(CAB)=64"
2) BOTH EIMCO 915E SCOOP AND ISUZU WERE CENTERED IN ENTRY
3) BUCKET IN FULL ROLL POSITION FACING ISUZU
4) DISTANCE 'X' = DISTANCE BETWEEN OPERATOR AND FRONT OF ISUZU

Figure 8 – IN MINE BLIND SPOT SURVEY – BUCKET FULL ROLL POSITION

The second phase of this in-mine survey was conducted with the Isuzu pickup truck facing the engine end of the Eimco 915E Scoop. The same procedures described previously were used and the results are shown in Figure No. 9.

| DISTANCE 'X' | COMMENTS |
|---|---|
| 13'0" | OPERATOR CAN SEE TOP OF ISUZU CAB AND DRIVER'S FACE |
| 28'-10" | OPERATOR CAN SEE ONLY ONE HEADLIGHT |
| 55'-0" | OPERATOR CAN SEE BOTH HEADLIGHTS AND BOTH PARKING LIGHTS |

NOTES:
1) ISUZU PICKUP TRUCK WAS USED AS OBJECT
HEADLIGHT HEIGHT=31" ROOF HEIGHT(CAB)=64"
2) BOTH EIMCO 915E SCOOP AND ISUZU WERE CENTERED IN ENTRY
3) DISTANCE 'X' = DISTANCE BETWEEN OPERATOR AND FRONT OF ISUZU

Figure 9 – IN MINE BLIND SPOT SURVEY – ISUZU CENTERED IN ENTRY FACING SCOOP ENGINE

As shown in Figure No. 9, the area of inadequate visibility was a distance of 55 feet from the operator when both vehicles were centered in the entry.

Since situations may occur where one vehicle may be off to the side of the entry, against the rib, a survey was conducted to determine the extent of the visibility problem in this type of situation. For this survey, the Eimco 915E Scoop was centered in the entry and the Isuzu pickup truck was located nearly against the rib, opposite the operator side of the scoop. The same procedures were used as previously described and the results are shown in Figure No. 10.

This part of the in-mine survey was similar to the above ground survey illustrated in Figure No. 5, where the 4-foot parallel distance from the side of the scoop was maintained and the distance from the operator to the point where he could see the 5'9" tall man's belt was determined. As shown by the results in Figure Nos. 5 and 10, the distance of approximately 71 feet, determined in both the above ground survey and the in-mine survey, corresponds very well for objects of similar height.

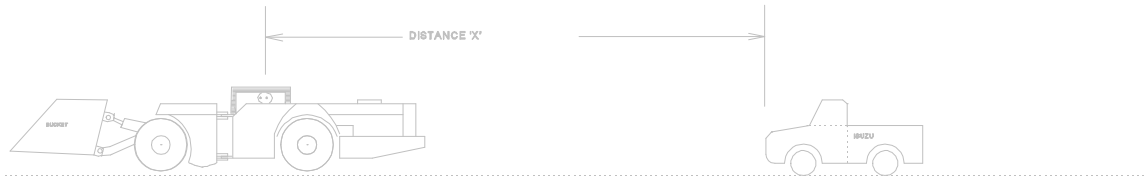


| DISTANCE 'X' | COMMENTS |
|---|---|
| 14'-6" | OPERATOR CAN SEE TOP OF ISUZU CAB AND PART OF FLASHING BLUE LIGHT |
| 53'-0" | OPERATOR CAN SEE ONLY ONE HEADLIGHT |
| 70'-8" | OPERATOR CAN SEE BOTH HEADLIGHTS AND ONE PARKING LIGHT |

NOTES:
1) ISUZU PICKUP TRUCK WAS USED AS OBJECT
HEADLIGHT HEIGHT=31" ROOF HEIGHT(CAB)=64"
2) EIMCO 915E SCOOP CENTERED IN ENTRY AND ISUZU PARKED NEAR RIB OPPOSITE OPERATOR'S COMPARTMENT OF EIMCO 915E SCOOP
3) DISTANCE 'X' = DISTANCE BETWEEN OPERATOR AND FRONT OF ISUZU

**Figure 10** – IN MINE BLIND SPOT SURVEY – ISUZU NEAR RIB FACING SCOOP ENGINE

The final part of the in-mine survey was conducted to determine the extent of the visibility problem when the operator must turn the Eimco 915E Scoop into a crosscut opposite the operator's side of the machine. This survey was conducted by articulating the Eimco 915E Scoop into a crosscut, engine end first, until the operator's compartment was approximately centered in the crosscut. At this point, the Eimco 915E Scoop was parked and the Isuzu pickup truck was centered in the crosscut nearly against the engine end of the scoop. This is illustrated in Figure No. 11. The procedures previously described were used and the results are shown in Figure No. 11. From the initial location nearly against the scoop to the distance of 269 feet between the operator and the front of the Isuzu pickup truck, the pickup truck was virtually invisible to the operator. Only reflections of light off the roof and rib could be seen. This survey was not conducted beyond the point of 269 feet because the crosscut floor began to slope downward at approximately a five percent grade, and any data gathered would not have been representative of the other in-mine survey conditions.

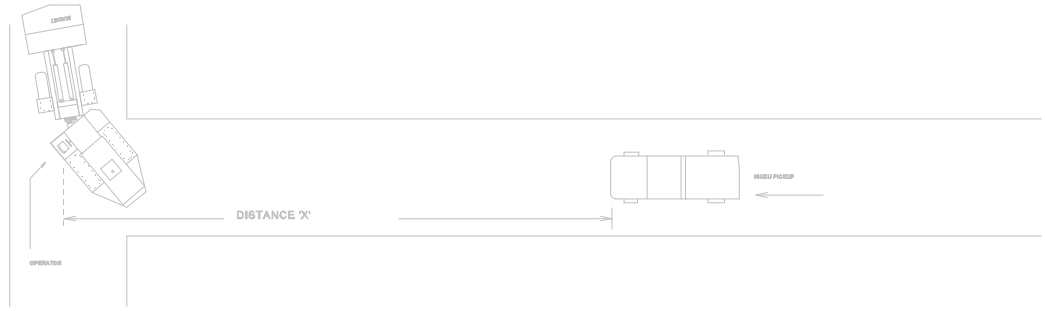


| DISTANCE 'X' | COMMENTS |
|---|---|
| 13'-0" | OPERATOR CAN BARELY SEE TOP OF ISUZU CAB |
| 269'-0" | OPERATOR CAN'T SEE HEADLIGHTS...<br>NO FURTHER MEASUREMENTS WERE TAKEN DUE<br>TO APPROX 5% GRADE AT THE 269' POINT |

NOTES:
1) ISUZU PICKUP TRUCK WAS USED AS OBJECT
HEADLIGHT HEIGHT=31" ROOF HEIGHT(CAB)=64"
2) EIMCO 915E SCOOP ARTICULATED INTO CROSSCUT
WITH OPERATOR'S COMPARTMENT ON OUTSIDE OF TURN
3) ISUZU PICKUP CENTERED IN CROSSCUT
4) DISTANCE 'X'= DISTANCE BETWEEN OPERATOR AND
FRONT OF ISUZU

**Figure 11** – IN MINE BLIND SPOT SURVEY – SCOOP ARTICULATED INTO CROSSCUT

## CONCLUSIONS

1. The above ground measurements, above ground investigation, and in-mine investigation of the reported operator visibility problems associated with the operation of the Eimco 915E Scoops at Cottonwood Mine showed that a lack of visibility does exist in areas toward the bucket end, engine end, and side opposite the operator of the machine.

2. The above ground measurements showed that the major cause of the visibility problem is the inability to raise the operator's line of vision above the machine frame. The operator's compartment and overhead protection canopy cannot be raised due to the height of the mine roof and the machine frame cannot be lowered due to the design of this machine. Modifications to lights, fenders, and cover plates improved visibility by removing obstructions in the line of vision, but these modifications did not resolve the major cause of the lack of visibility.

3. The above ground investigations showed that large areas of total blind spots (i.e. areas where an object 5'9" tall could not be seen) exist toward the engine end of the machine opposite the operator's side of the machine where personnel, equipment, and other vehicles may typically be present during the normal course of the work day. This survey also showed that specific height objects ranging from 5'9" tall to ground level cannot be seen by the operator at distances ranging from 23 feet to 199 feet from the machine.

4. The in-mine investigation showed that the operator could not adequately see the Isuzu pickup truck headlights at a range of distances of 55 feet to 269 feet from the operator. The worst case situation for operation in a straight section of the road was bucket forward in the half roll position. In this configuration, the operator could only see one headlight of the Isuzu pickup truck at a distance of 164 feet. The worst case situation overall was turning into a crosscut opposite the side of the operator. In this case, the Isuzu pickup truck was virtually invisible at any distance to the operator, except for reflections of the headlights off the roof and ribs.

5. The extent of the impaired visibility found in this investigation is considered potentially hazardous to mine personnel and other equipment located in the same travelways as the Eimco 915E Scoop. In this mine, the Eimco 915E Scoops are incompatible with the mine conditions and practices. Their use as general haulage machines requires them to

travel in areas of the mine where dips and rolls are typically present in the roadway, and in high traffic areas where mine personnel and much smaller equipment and vehicles frequently are present.

6. The type of visibility problem encountered during this investigation cannot be addressed during the machine approval process at the Approval and Certification Center because the nature and severity of the operator blind spot areas are dependent upon how and where the machine is used. Determination of the hazards associated with impaired operator visibility will vary from mine to mine, and the MSHA enforcement personnel should determine the suitability of machines based on the mine conditions and practices.

## RECOMMENDATIONS

1. Low profile scoops should be considered as an alternative to the Eimco 915E Scoops for general haulage where mine roof heights restrict an operator's visibility. Machines with lower frame heights would allow the operator's line of vision to be raised higher than the machine frame, thus nearly eliminating the blind spot areas. In addition, the lower frame height would be nearly equal to the height of the Isuzu pickup truck headlights making the headlights visible to the operator in nearly all situations.

2. The Eimco 915E Scoops should only be used in specific operations where all mine personnel have full knowledge of the machines' whereabouts. Their use as general haulage machines should be eliminated.

3. In general, specific traffic rules and safe driving practices should be instituted and strictly enforced.

4. MSHA Enforcement should be alert to the possibility of operator visibility problems on other mine equipment whose frame/canopy height approximates the height of the mine openings in which the equipment operates. The evaluation and severity of hazards should take into account how and where the machines are used, and the amount of personnel or other equipment in the general vicinity of operation.